NOPAK INTERMEDIATE PRESSURE SQUARE HEAD CLASS P6-AIR & H6-HYDRAULIC CYLINDERS

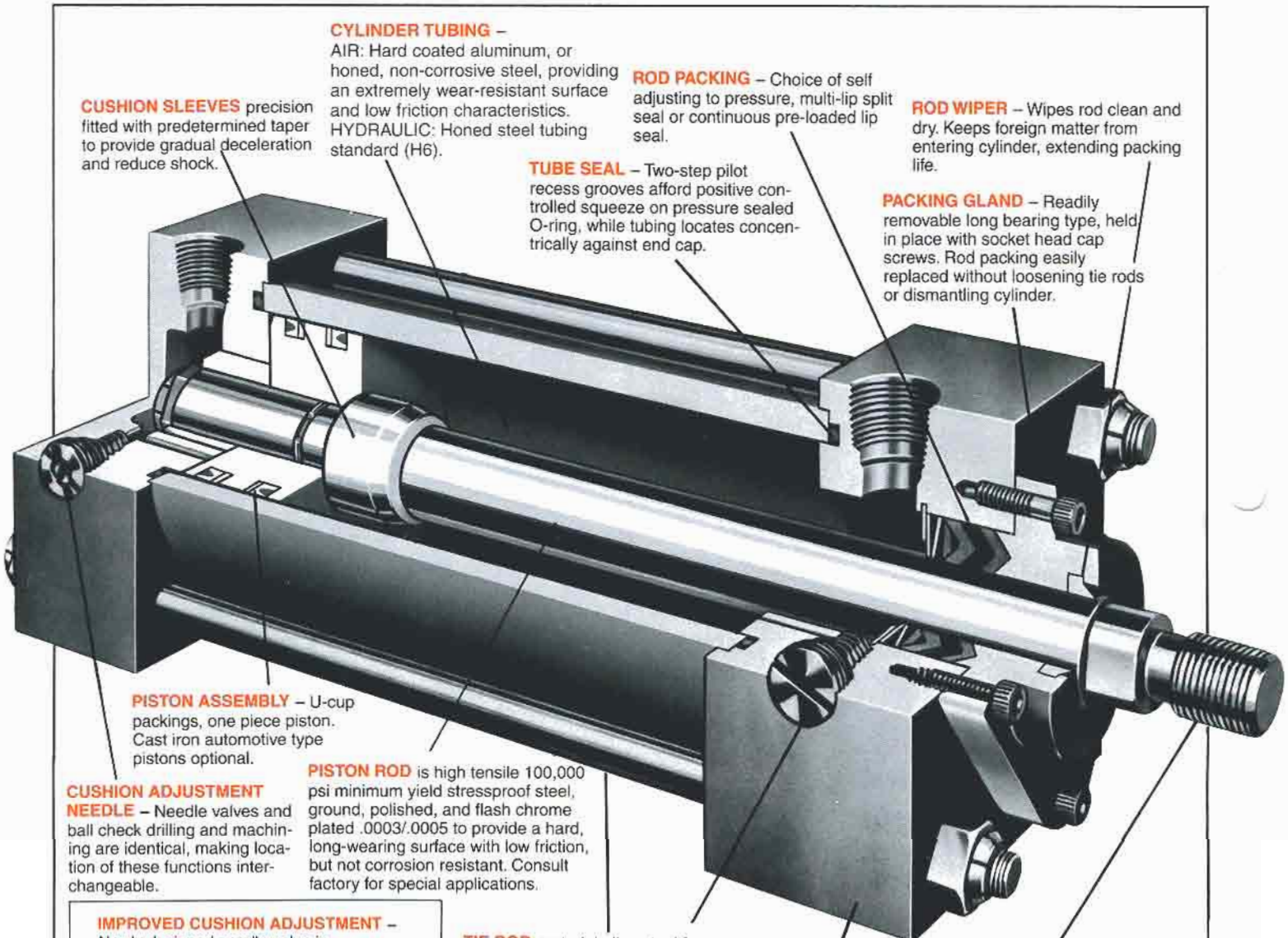

CYLINDER TUBING – AIR: Hard coated aluminum, or honed, non-corrosive steel, providing an extremely wear-resistant surface and low friction characteristics. HYDRAULIC: Honed steel tubing standard (H6).

CUSHION SLEEVES precision fitted with predetermined taper to provide gradual deceleration and reduce shock.

ROD PACKING – Choice of self adjusting to pressure, multi-lip split seal or continuous pre-loaded lip seal.

ROD WIPER – Wipes rod clean and dry. Keeps foreign matter from entering cylinder, extending packing life.

TUBE SEAL – Two-step pilot recess grooves afford positive controlled squeeze on pressure sealed O-ring, while tubing locates concentrically against end cap.

PACKING GLAND – Readily removable long bearing type, held in place with socket head cap screws. Rod packing easily replaced without loosening tie rods or dismantling cylinder.

PISTON ASSEMBLY – U-cup packings, one piece piston. Cast iron automotive type pistons optional.

CUSHION ADJUSTMENT NEEDLE – Needle valves and ball check drilling and machining are identical, making location of these functions interchangeable.

PISTON ROD is high tensile 100,000 psi minimum yield stressproof steel, ground, polished, and flash chrome plated .0003/.0005 to provide a hard, long-wearing surface with low friction, but not corrosion resistant. Consult factory for special applications.

IMPROVED CUSHION ADJUSTMENT – Newly designed needle valve is interchangeable with current design and offers improved sealing characteristics.

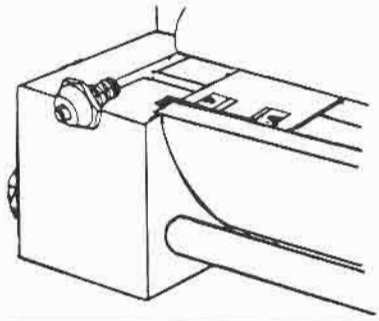

TIE ROD material alloy steel for maximum strength. Multiple tie rods in each corner are furnished on all 16" through 20" diameter cylinders.

CUSHION BALL CHECK assures quick starting under full power; pressure acts on full piston area instantaneously.

END CAPS (Cylinder Heads) Precision steel blocks

ROD END THREADING – Choice of standard catalog male and female thread types plus standard wrench flats.